- GI-SS-2000 Liquid Capacity = 2,000 gallons.
- Grease capacity at 100 gpm = 13,102 lbs.
- Grease capacity at 250 gpm = 6,600 lbs.
- Certified by CSA and IAPMO to ASME A112.14.3, CSA B481, and ANSI Z1001
- Approved installation to ASME A112.14.3 Type C
- Factory installed internal piping.
- 3/8" thick seamless high density polyethylene.
- Full internal access through lids.
- Vent not required for proper operation.
- Designed for above or below ground installations.
- Integral Anti-siphon Air Relief port.
- H^2O Covers Standard.
- Maximum Temperature 190° continuous.

Suffix	Optional Variations
-AK	High water anchor kit (set of two)
-C	Lid Extension (specify dimension required)
-COA	Coalescer Pack
-DI	Ductile Iron lid & collar
-DP	Dosing Pump
-EP	Enzymy Port
-FL-C	Membrane clamp kit
-F6	6" No Hub Inlet / Outlet connection (flow rate of 700 GPM with 6" connection)
-HLA	High level alarm and float switch (to be installed on site)
-LHSI	4" no hub inlet on left hand side
-LHSO	4" no hub outlet on left hand side
-PDI	PDI plate and external vented flow control fitting to meet PCI Standards
-RHSI	4" no hub inlet on right hand side
-RHSO	4" no hub outlet on right hand side
-RPO	4" Remote pump outlet connections on top of interceptor - specify location and number required
-SB	Sediment Bucket
-SP	External Sample Port (for existing construction. Inlet and Outlet on the same level)
-SP-OF	External Sample Port (for new construction. Inlet higher than the outlet)
-SST	Fire resistant fabricated stainless steel interceptor
-ST	Fire resistant fabricated 10 guage powder epoxy coated steel interceptor
-V	Vent connection - 4" (specify number required and location - side and / or top)

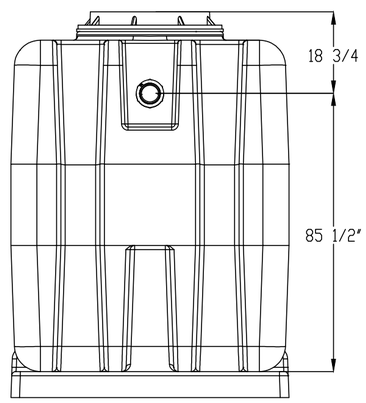

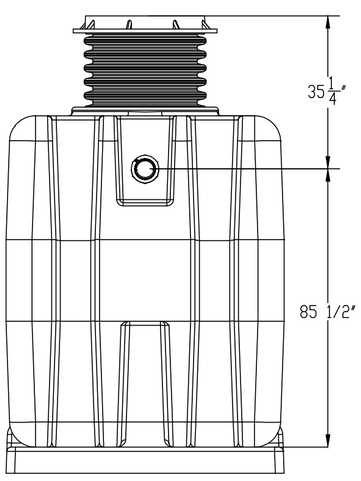

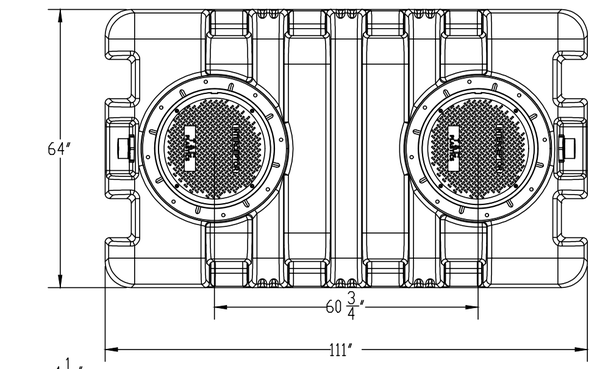

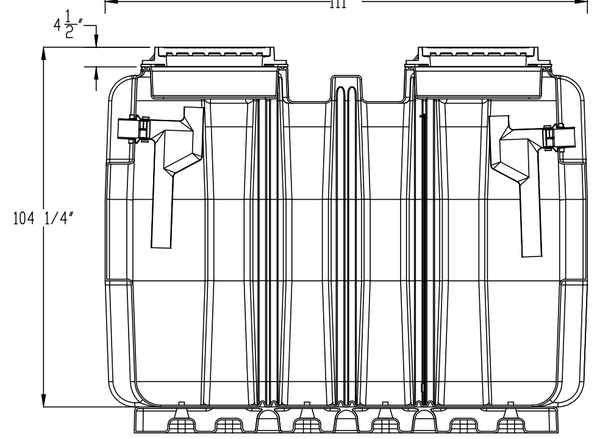

SHOWN WITH DIRECT CONNECT LID OPTION (-DCL)

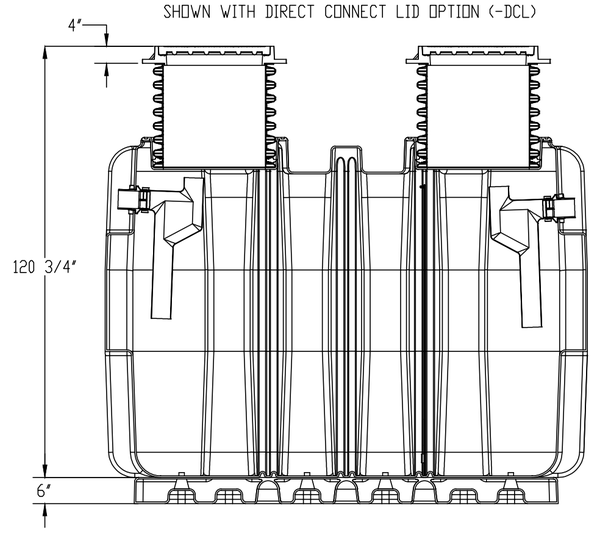

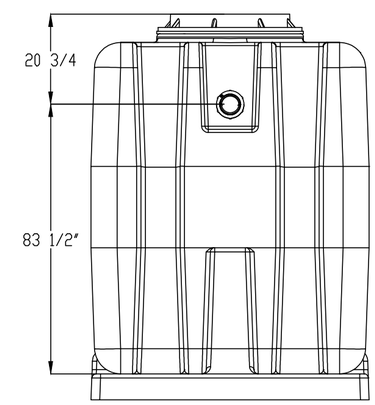

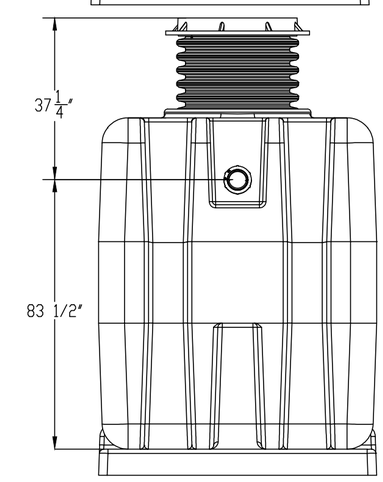

UNLESS STATED OTHERWISE DIMENSIONS ARE IN INCHES	MATERIAL: HDPE				TITLE: GI-SS-2000		REV:
	WEIGHT [lb]: 1,350 lbs.		NAME	DATE		SHEET 1 OF 1	SIZE:
		DRAWN	DR	01/02/2023			
	DO NOT SCALE DRAWING	CHECKED				SCALE: 1:2	

T&C PLASTICS
WWW.TANDCPLASTICS.COM
732-780-5300

THE INFORMATION CONTAINED IN THIS DRAWING IS THE SOLE PROPERTY OF TOWN & COUNTRY PLASTICS LLC. ANY REPRODUCTION IN PART OR AS A WHOLE WITHOUT THE WRITTEN PERMISSION OF TOWN & PLASTICS LLC IS PROHIBITED.